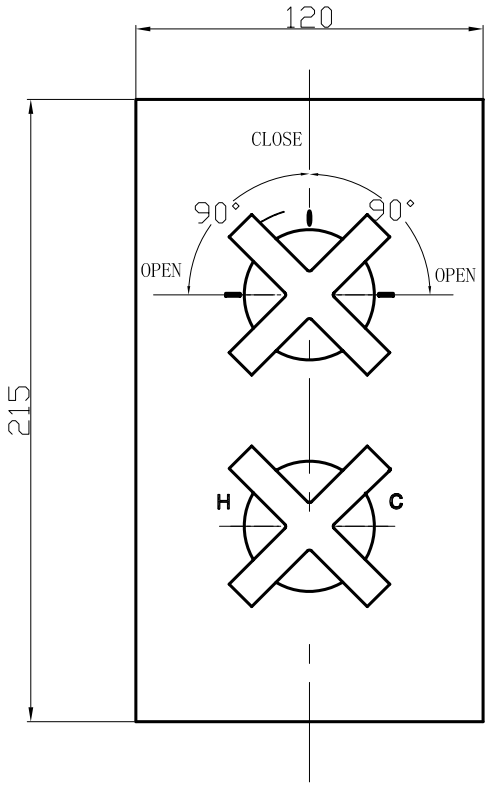

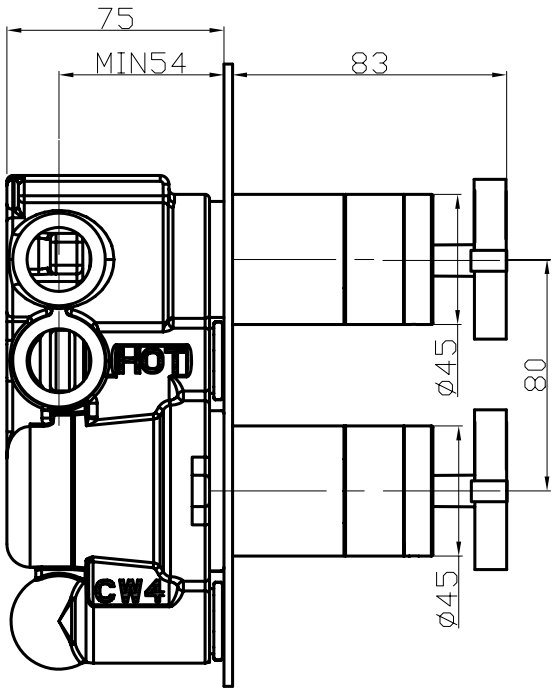

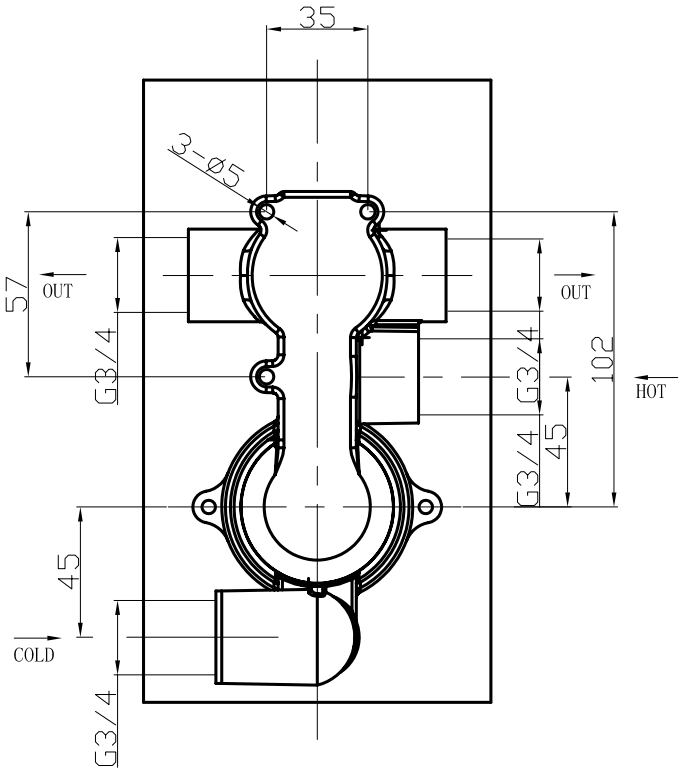

AL1500RC - ALVERO THERMOSTATIC SHOWER VALVE With 2 Way Diverter