crosswater

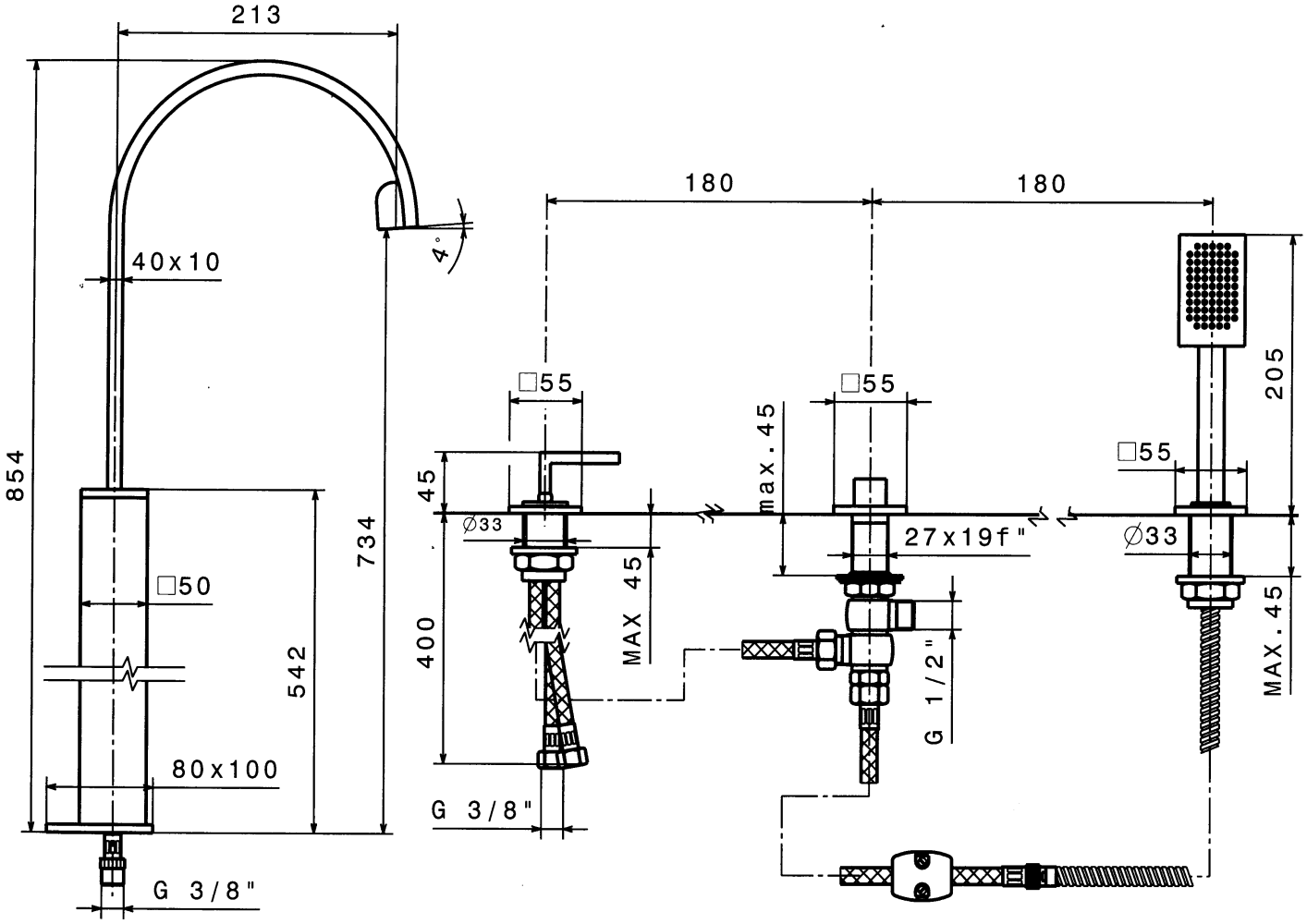

EG330DC - EGON BATH 3 HOLE SET WITH SPOUT Deck Mounted