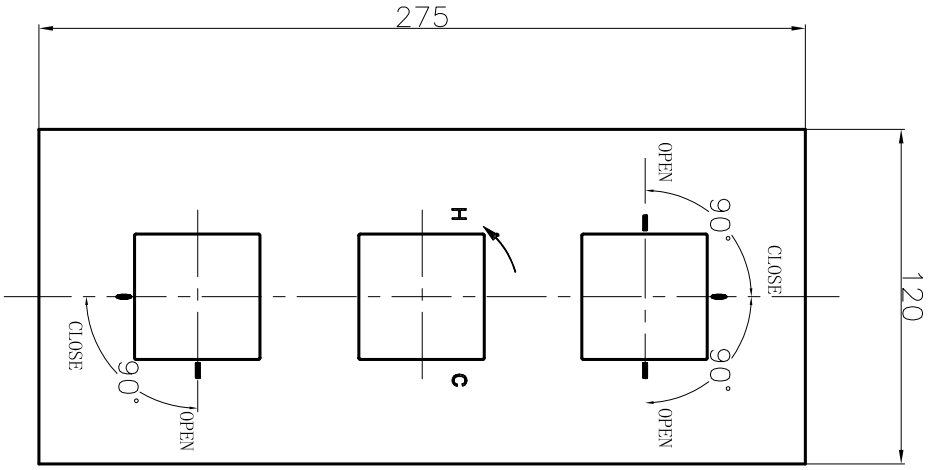

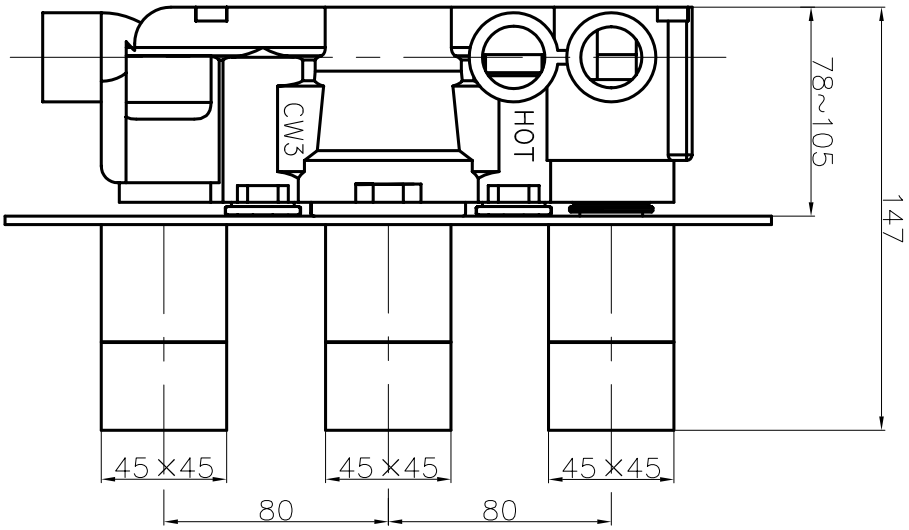

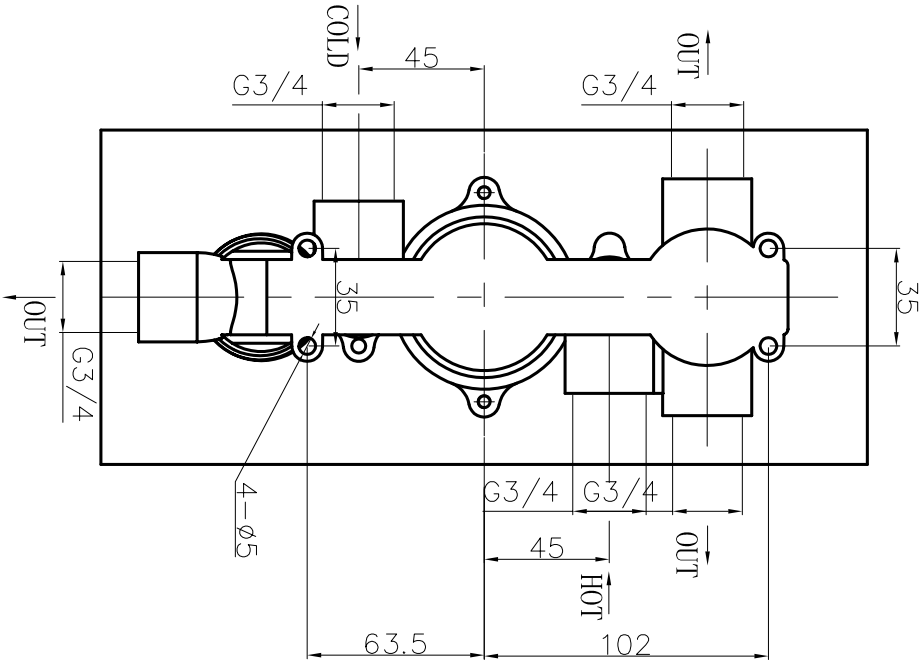

WS3000RC - WATERSQUARE THERMOSTATIC SHOWER VALVE 3 Way Portrait